Bar Graph RC Battery Meter

Author Rajkumar Sharma

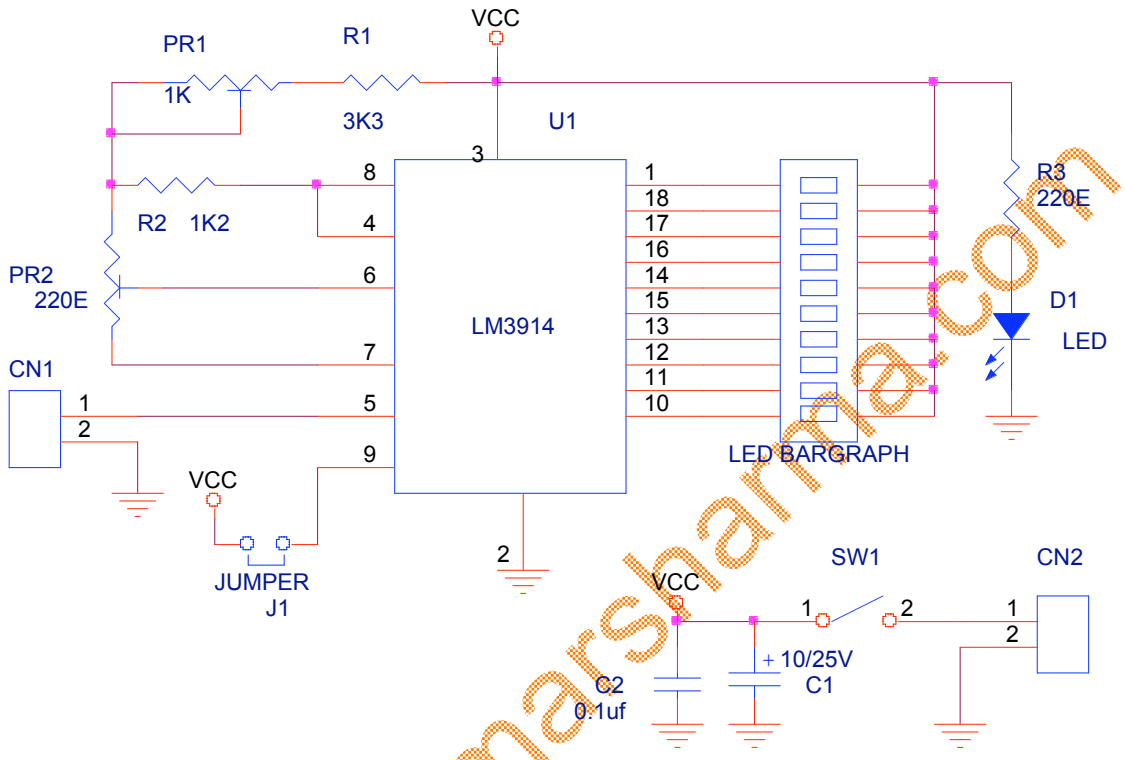

RC Voltmeter

- This simple project is made to for Radio Controlled hobbyist
- This can be use to measure the voltages of RC Battery
- Based on national LM3914 IC
- CN1 is for measure the Battery voltages
- CN2 is 9 V DC input
- This will show the Battery condition in 10 LEDs Bar Graph

Copyrights 2004

www.rajkumarsharma.com