Solid State Audio Recording and Playback

Author Rajkumar Sharma

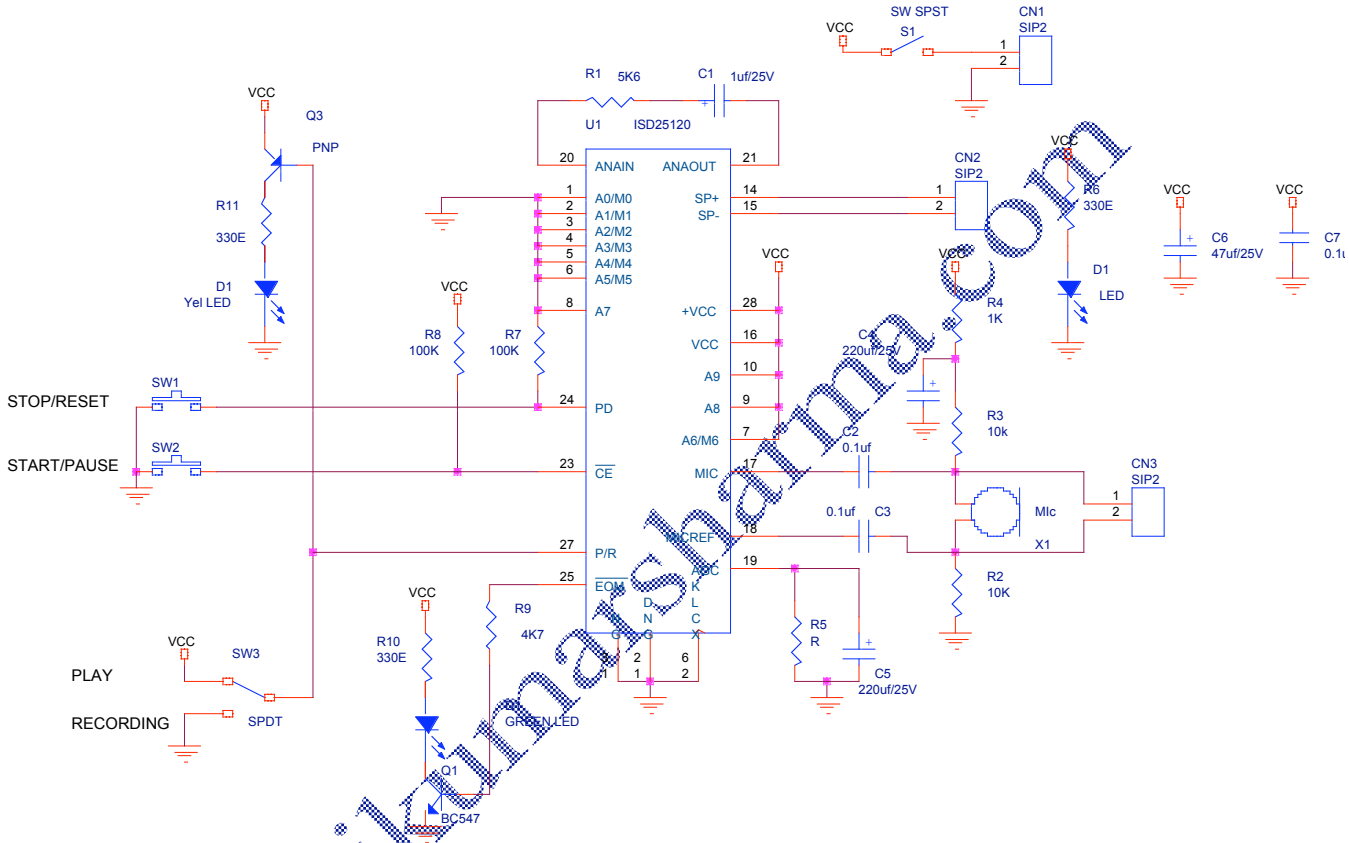

www.rajkumarsharma.com

This simple Audio Recording and Playback system is based on winbond IC, this IC can store up to 2 minutes sound in 28 pin DIP package. Massage can store and erase so many times this can be use for Animatronics application or telephone massage store, in fire alarm system in telephone answering machine or in Alert alarms.